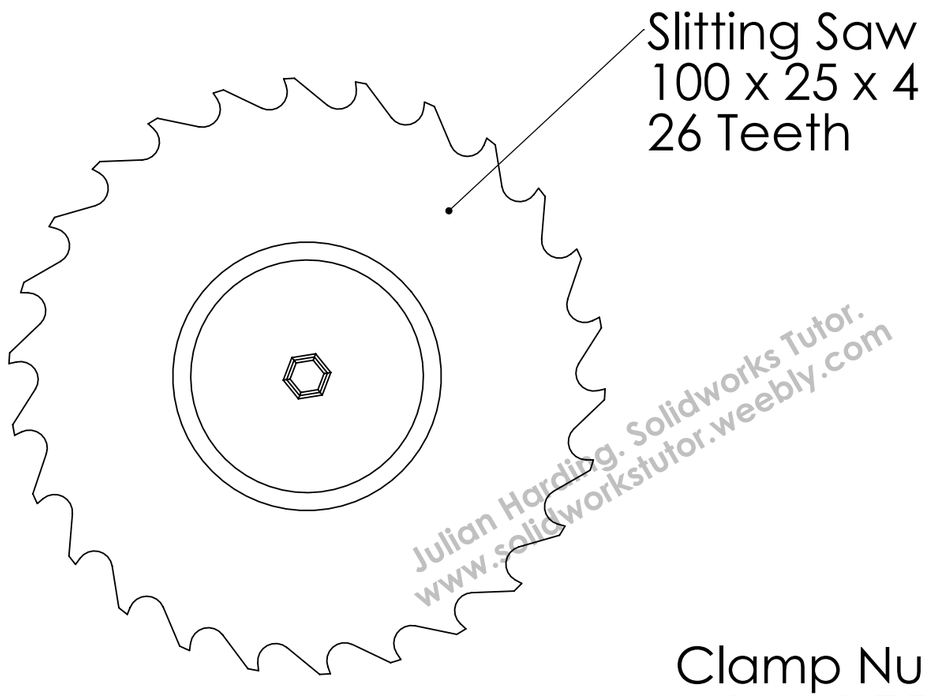

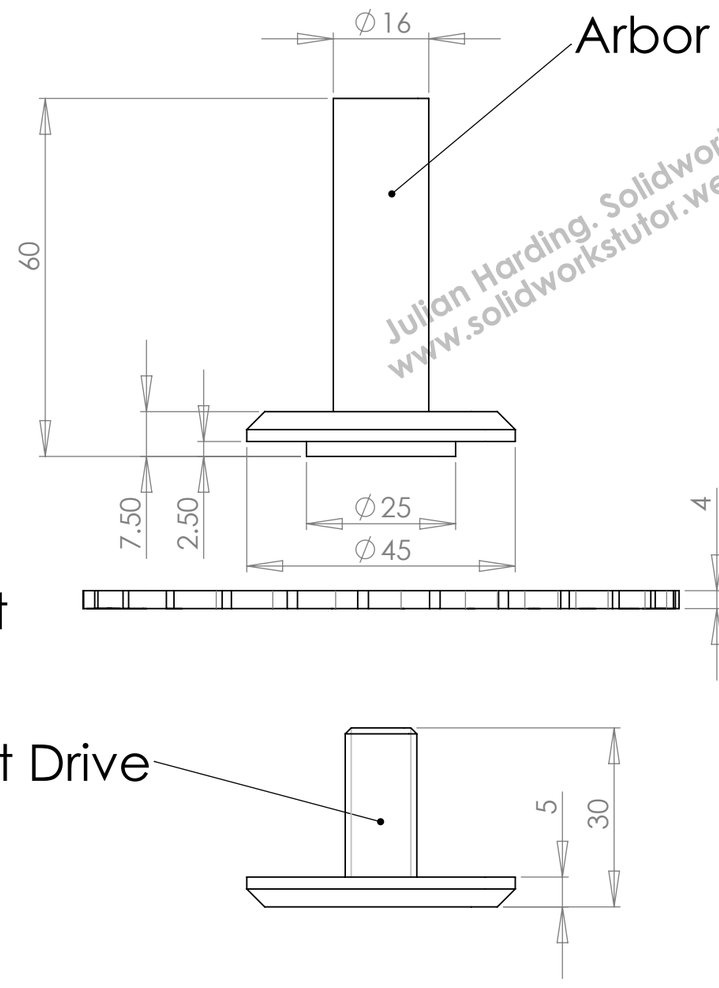

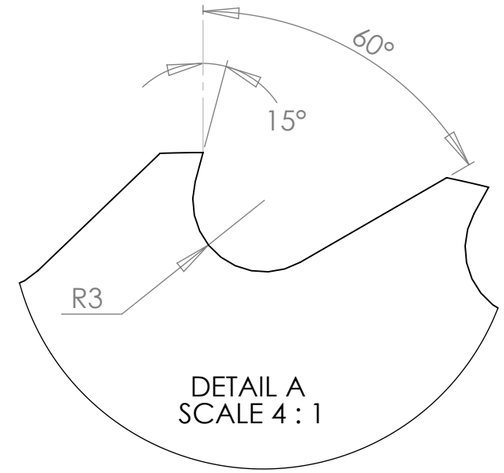

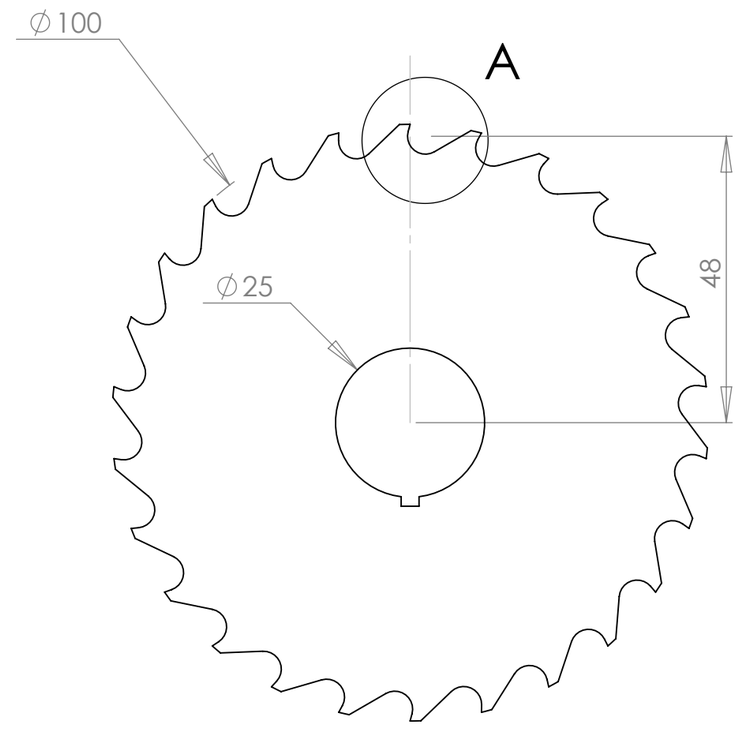

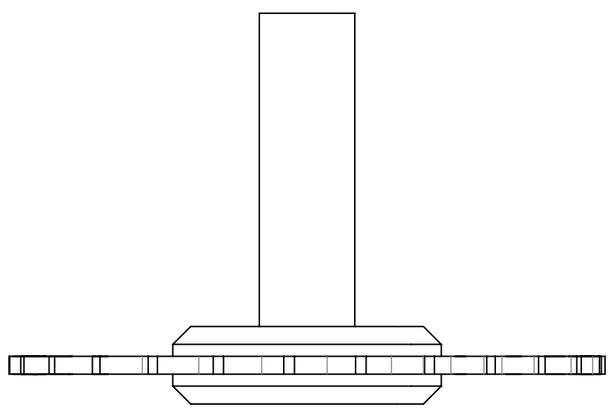

Julian Harding. Solidworks Tutor.
www.solidworkstutor.weebly.com

SolidWorks Educational Edition.
For Instructional Use Only.

Slitting Saw Assembly.